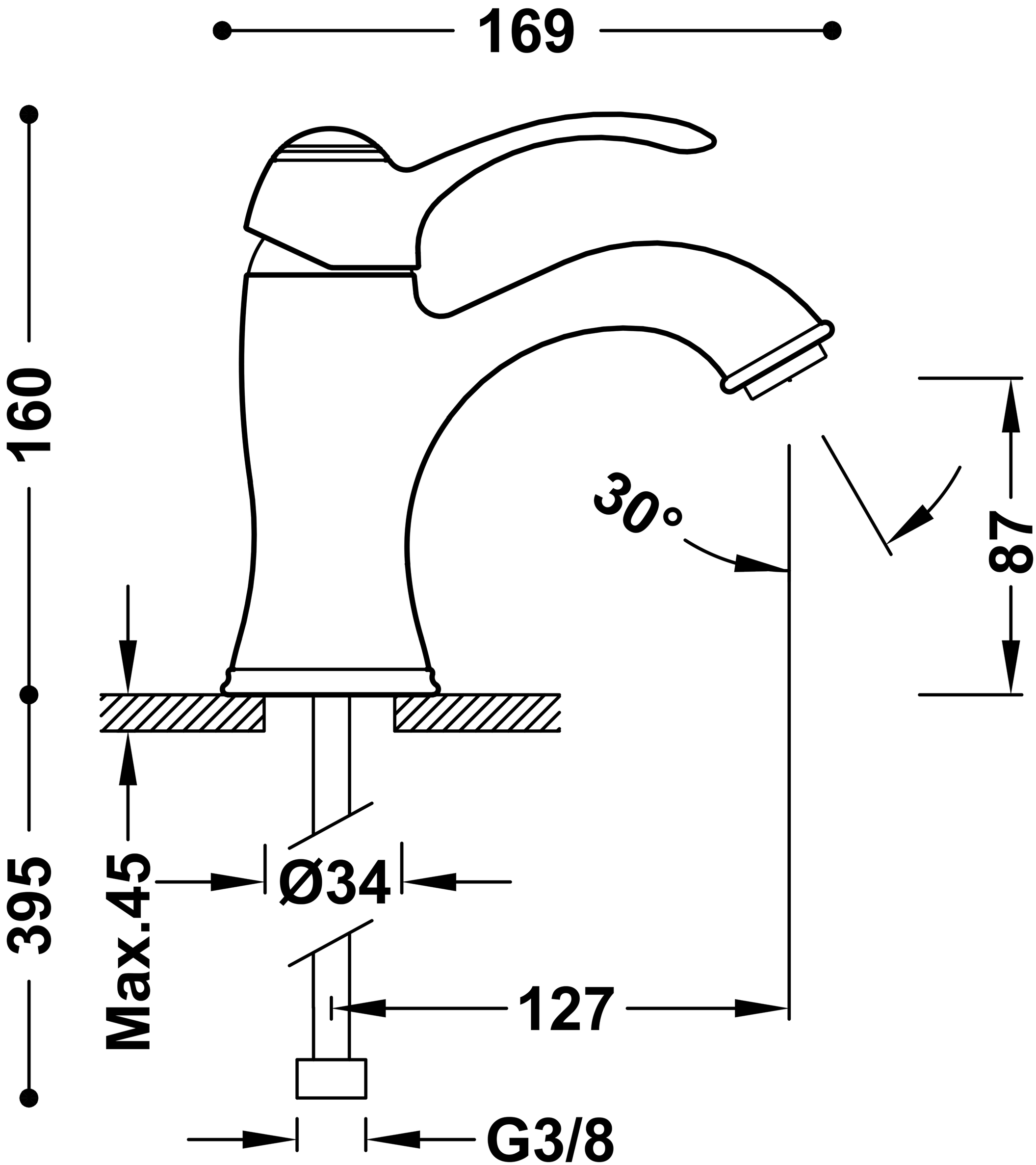
169
160
395
Max.45
Ø34
30°
87
127
G3/8