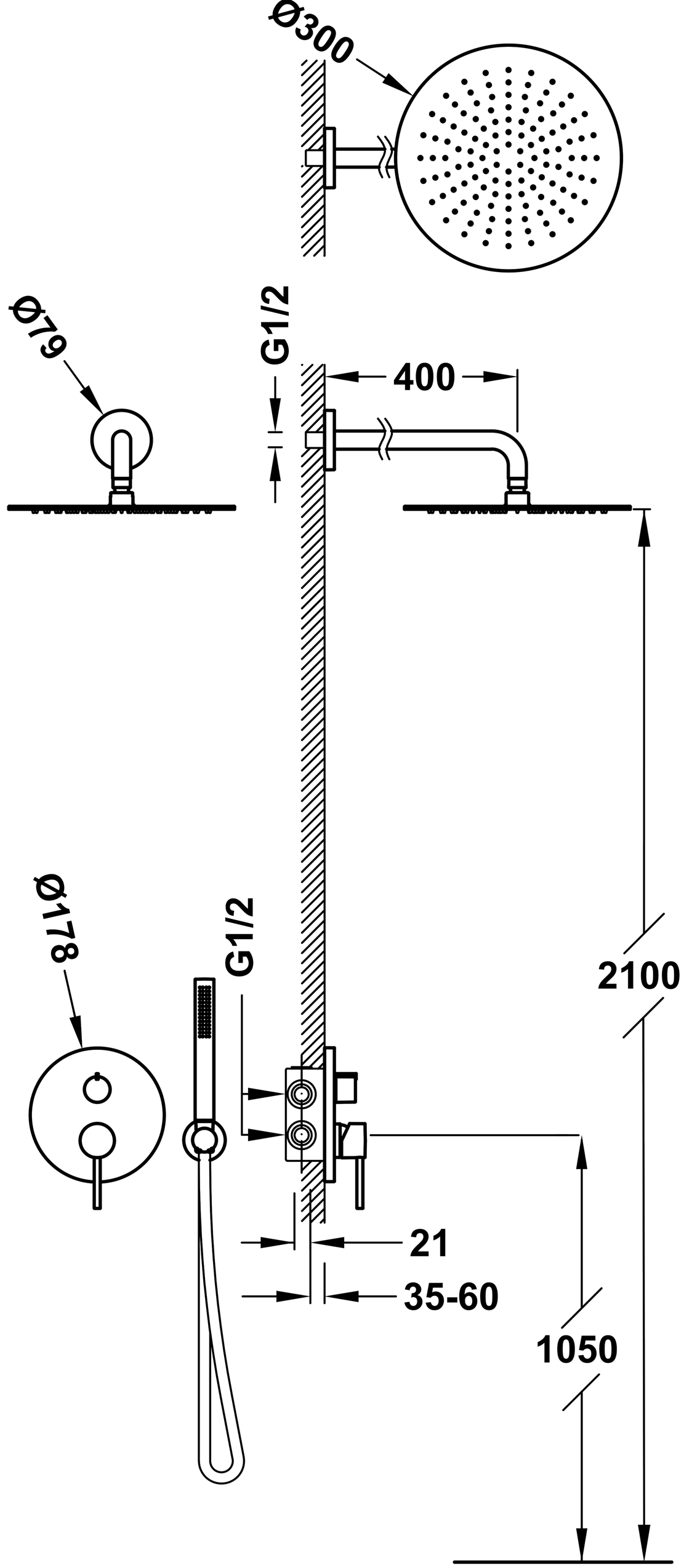
Ø300
Ø79
G1/2
400
Ø178
G1/2
2100
21
35-60
1050