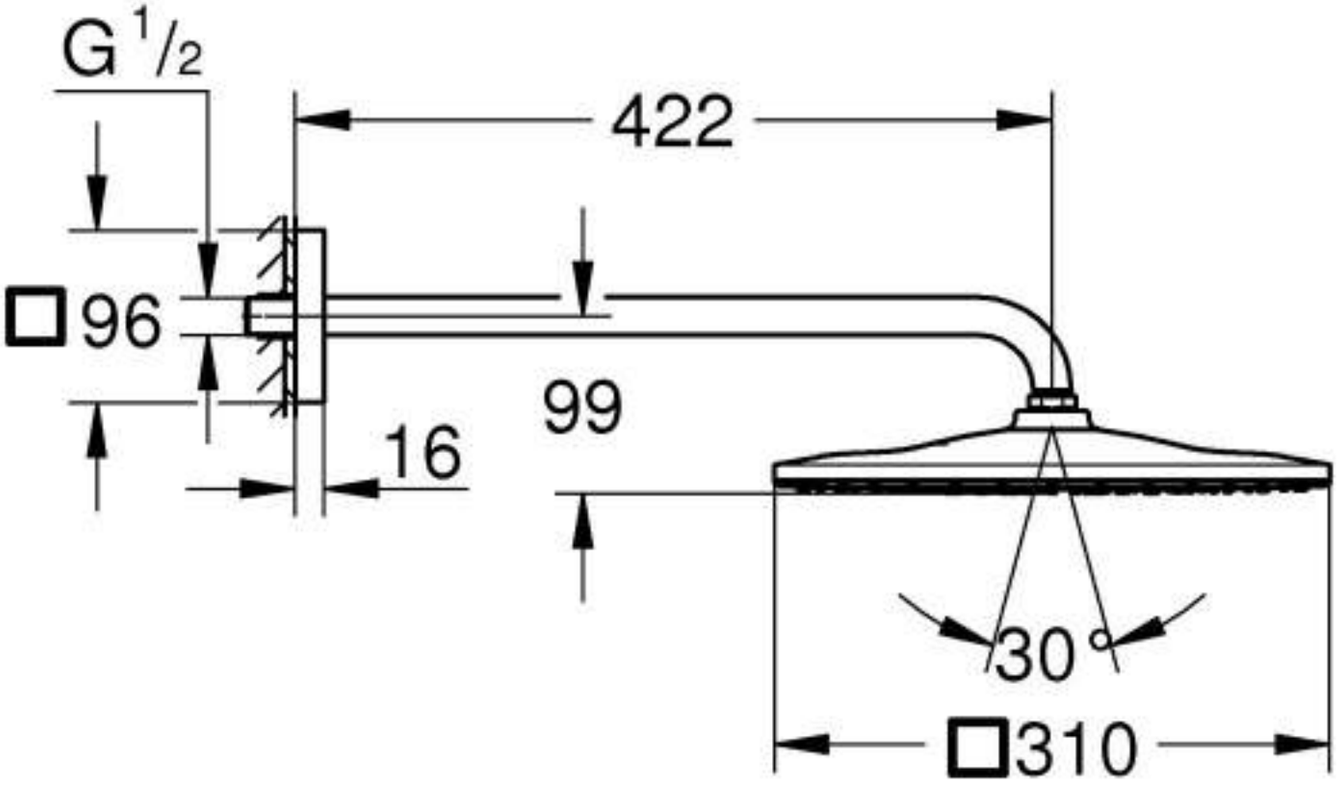
G 1/2
422
□96
99
16
30°
□310